CRP-RH14-06-W(Nynhan)
CRP-RH14-06-W(LH)
INDUSTRIAL ROBOT WELDING APPLICATION

FUNCTIONAL FEATURES

- Enhanced Performance: Equipped with high-speed motors and software optimizations, achieving a 20% faster cycle time compared to the previous generation.
- Compact Design: Features a lighter overall structure with a reduced forearm size, significantly improving accessibility in tight workspaces.
- Robust Protection: J1 and J2 axes are fitted with protective bellows, and the system utilizes a fully enclosed torch design.
- Integrated Cable Routing: J4 and J6 axes incorporate a hollow structure for internal cable routing, compatible with a hollow torch.
- Streamlined Integration: All user cables, air hoses, and welding cables are internally routed, resulting in a clean appearance and a fully streamlined profile.

ROBOT BODY TECHNICAL PARAMETERS

Model		CRP-RH14-06-W(Nynhan)/CRP-RH14-06-W(LH)
Arm form		Vertical multiple joints
Degree of freedom		6 axis
Maximum payload		6kg
Maximum coverage		1468mm
Maximum travel	Axis 1	Formal/inverted-168°~168°,wall mounting-30°~30°
	Axis 2	-50°~170°
	Axis 3	-78°~150°
	Axis 4	-190°~190°
	Axis 5	-110°~130°
	Axis 6	-190°~190°
Maximum speed	Axis 1	230°/S
	Axis 2	230°/S
	Axis 3	230°/S
	Axis 4	430°/S
	Axis 5	430°/S
	Axis 6	630°/S
Allowable torque	Axis 4	10N.m
	Axis 5	10N.m
	Axis 6	3N.m
Allowable moment of inertia	Axis 4	0.25kg.m²
	Axis 5	0.25kg.m²
	Axis 6	0.05kg.m²
Repeated positioning accuracy		±0.08mm
Robot body weight		155kg
Installation mode		Formal/inverted/wall mounting
Body interface	Reserved IO	16Pin
	Reserved gas	2*ϕ8mm
Installation environment	Ambient temperature	0~45°C
	Relative humidity	20%~80%RH(No condensation)
	Vibration	Under 0.5G
	Others	Robot installation must be away from: flammable or corrosive liquids or gases, electrical sources of interference
IP level		IP56
Advantage features		Compact structure, high speed, high precision, high expansibility and easy operation
Application		Welding
Matching electrical cabinet		G9/G9A

INSTALLATION INTERFACE DIAGRAM

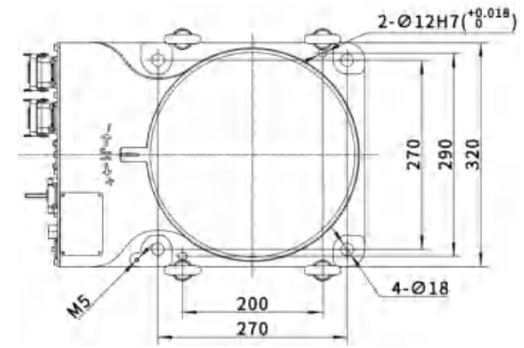

Installation Dimensions of Base

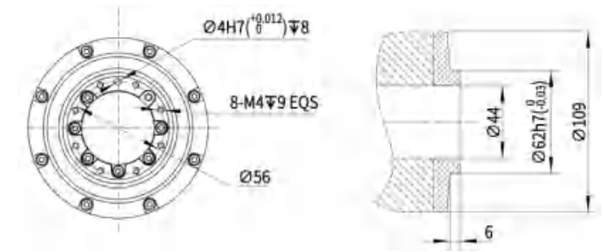

Flange Dimensions
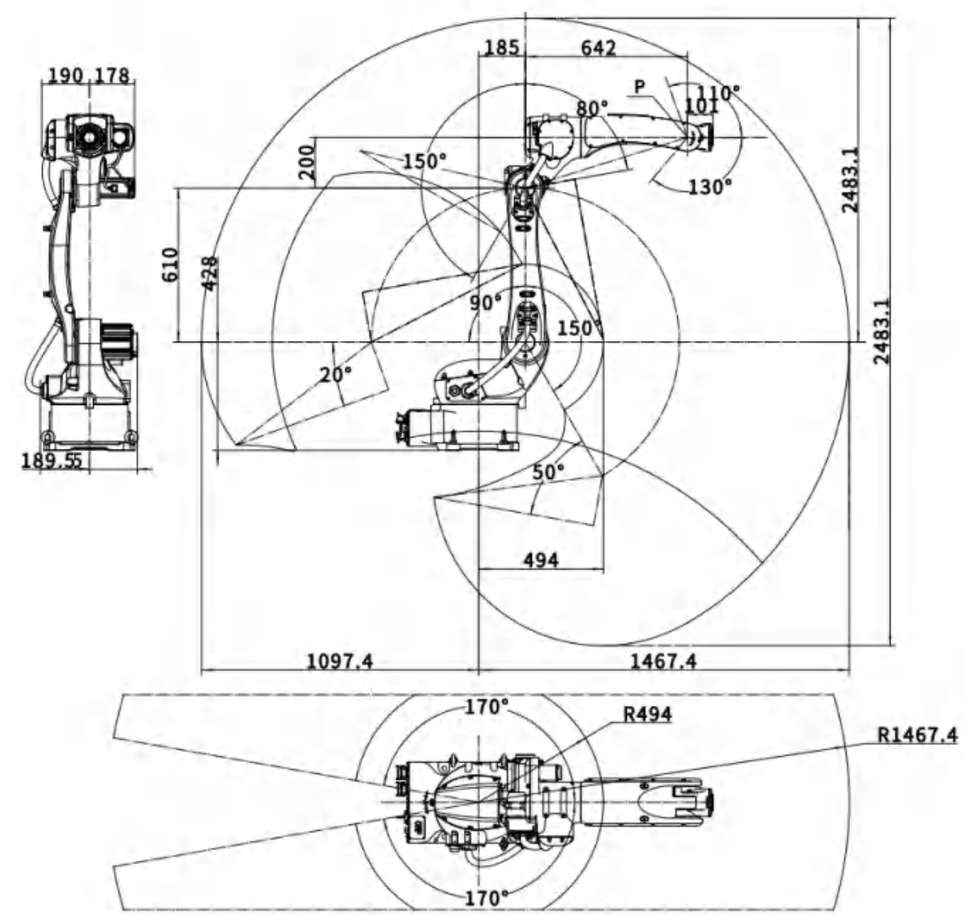
WORKING RANGE DIAGRAM